This full text paper was peer-reviewed at the direction of IEEE Instrumentation and Measurement Society prior to the acceptance and publication.

An Experimental Characterization of Chain of PLLs for Wired Clock Synchronization of UWB Anchors for Indoor Location

2022 IEEE International Instrumentation and Measurement Technology Conference (I2MTC) | 978-1-6654-8360-5/22/$31.00 ©2022 IEEE | DOI: 10.1109/I2MTC48687.2022.9806698

Stefano Rinaldi, Alessandro Musatti, Alessandro Depari, Paolo Ferrari, Alessandra Flammini, Emiliano Sisinni
Department of Information Engineering
University of Brescia
Brescia, Italy
stefano.rinaldi@unibs.it ORCID: 0000-0001-7300-1053

***Abstract*—The Internet of Things (IoT) enables services in a variety of domains. However, some of them, such as autonomous vehicles, may require information about the location where the sensed data is obtained. Well-established location technologies (e.g. the Global Navigation Satellite System - GNSS) can be used for outdoor devices, but they may fail indoors. On the contrary, Ultra-Wide Band (UWB) technology is one of the most promising solutions for Indoor Real-Time Location System (I-RTLS). In general, these solutions allow for the location of devices (called tags), in relation to nodes placed in known positions in space (called anchors). Several approaches for device localization using UWB technology are known in the literature. Some of them, like the Time Differential of Arrival (TDoA) method, necessitate a time synchronization solution in order to distribute the time accurately among the anchors. The use of a wired method for anchor time synchronization is studied in this research, since the architecture of the clock distribution network may affect the signal accuracy provided to each anchor. The reference method would be to connect each anchor directly to a common clock source, however this solution is the most demanding in terms of wiring. The chain topology, in which the clock is used and then re-distributed by each of the clock network's nodes, is an intriguing option for reducing overall cabling requirements. According to the experimental characterization, the phase error of the clock generated by a chain topology is 9.3% larger than the phase error of the reference topology, but it is still within the usage requirements.**

Keywords—Phase Locked Loop, syntonization, indoor location, time synchronization, Ultra Wide Band, Internet of Things, Industry 4.0.

I. INTRODUCTION

The Internet of Things (IoT) is undoubtedly one of the most popular keywords, embracing not just technical but also ordinary life fields. It is a game-changing paradigm shift in Internet-based connectivity that promises to enable a huge number of smart devices to remain connected. IoT is expected to deliver so-called pervasive computing as a result of the development of flexible, scalable, and autonomous Wireless Sensor (and Actuators) Networks (WSNs) [1]. On the other side, many of the services that could be provided may require the position information, which is still frequently unavailable. Applications that use position information include autonomous vehicle geolocation [2][3] and the tracking of human flows in indoor spaces, to name a few.

Despite the fact that satellite-based radio localization, such as Global Navigation Satellite System (GNSS), is a well-established technology for outdoor applications, there is no unanimous consensus on the most cost-effective and precise indoor localization technique. The solutions for recognizing and tracking the location of assets in real-time or near-real-time is referred in literature to as Indoor Real-Time Location Systems (I-RTLS). Generally, different applications adopt different localization techniques. The tracking of industrial unmanned vehicles and robots for automatically coordinating the activities of different working islands [4], the tracking of assets in warehouse [5][6] as well as the localization of people flows in indoor environments for improving safety, energy efficiency, and room management in large buildings (such as hospitals, airports, or large malls), are the target applications in this paper. The most promising solutions for I-RTLS, that fit the requirements of applications above mentioned, are based on Ultra Wide Band (UWB) technology[7][8], because of the optimal tradeoff between performance and complexity (and, consequentially, costs). Other research works are investigating the use of the recent service Direction Finding introduced by Bluetooth [9], based on the angle of arrival or angle of direction, for industrial applications, but, currently, this technology is not yet mature.

An RTLS based on UWB communication technology can be deployed using different algorithms to locate the position of nodes, referred to tags, with the respect to nodes placed in known position in the space, referred to anchors. One of the most interesting algorithms is the Time Differential of Arrival (TDoA) because of its scalability in term of number of tags that can be located. However, the ranging accuracy in that case, is strictly related to the time synchronization of anchors. A wired dedicated network for the clock distribution is proposed in [10]. However, the proposed solution has several feasibility issues, because it is based on a simple star clock network, which can pose severe constraints on cabling. A better alternative could be the adoption of a chain topology, which makes the deployment easier at the price of performance loss. Unfortunately, currently there are no works quantifying this loss in a controlled, real-world scenario.

The main contributions of the paper with the respect to scientific literature are:

- Investigation of a chain topology for clock distribution which benefits was already demonstrated in similar in similar context [11];
- Design of experimental set-up for the characterization of clock distribution;
- Experimental characterization and comparison of star and chain topologies in clock distribution.

This work is partially supported by the Italian government via the NG-UWB project (MIUR PRIN 2017) and by the eLUX Laboratory of the University of Brescia..

Authorized licensed use limited to: ULAKBIM UASL - Galatasaray Universitesi. Downloaded on November 06,2022 at 15:16:55 UTC from IEEE Xplore. Restrictions apply.

The design of the characterization set-up considers as reference an UWB I-RTLS system, formed by EVB1000 devices from Qorvo. The selection of the reference location system is important for the proper identification of the clock frequency to be generated and distributed.

II. Indoor Real-Time Location Systems: overview

The ISO/IEC 24730 standard family [12] focus on RTLS solutions, and includes specialized sub-parts each devoted to a particular Air Interface Protocol (AIP) targeting different applications that utilize localization services. RTLS applications, as classified by ISO/IEC 24730, might have a wide range of requirements: four main classes are identified, with localization precision ranging from 10 meters (for outdoor, satellite-based solutions) to sub-meter (for locating an asset in a confined and instrumented area).

Localization can be range-free or range-based, depending on how distance is measured. The former makes advantage of connectivity and topology-related data, such as the number of hops from the data sink. Because the technique is hardware agnostic, the price to pay for an easy implementation is low precision. The range-based method, on the other hand, assumes that inter-node distance can be calculated using specific ranging peripheral that processes real-world signal. Modeling path loss for various node to node connections and calculating the distance using the Received Signal Strength Indication (RSSI) is one option. Nevertheless, the presence of obstacles has a significant impact on the performance that may be achieved. The most promising localization solutions use Time of Flight (ToF) [13] and Time Difference of Arrival (TDoA) [14] assessment for the ranging technique, which is used by the localization algorithms [15]. Regardless of the used algorithms, an accurate calculation of the Time of Arrival (ToA) of the reference message is required. The ISO/IEC 24730-62 [16] standard, which specifies an AIP based on the well-known and generally approved IEEE 802.15.4 [17] standard for Low Rate Personal Area Networks, describes an AIP employing a physical layer Ultra Wide Band (UWB) signaling method. UWB is well-known for combining precise message time localization with a limited coverage due to the high-frequency working range. Very short impulses, in particular, are resistant to multipath degradation and, when supplied at a high repetition rate, can result in high transmission throughput, representing a feasible approach for very accurate ToA estimation [18].

The most common localization approach is multilateration, which minimizes the sum of squared distances between the node to be located, referred to as tag, and some reference nodes, referred to as anchors, whose locations are known. The basic ToF, also known as One-Way Ranging (OWR), architecture (Fig. 1.a), in which a single message is sent between a tag and an anchor, mandates precise time synchronization among nodes, because each device must know the transmission and arrival times. Two-Way Ranging (TWR) is an asynchronous strategy that begins with a message from the ranging initiator and ends with a response from the responder after a fixed and known delay, as shown in Fig. 1.b. The third ranging technique is TDoA (Fig. 1.c). This approach requires the time the signal was received and the speed at which it travels, not the time the signal was transmitted from the tag. The difference in arrival time between the target and reference anchors can be used to compute the distance between the tag and the reference points once the signal has been received. This difference can be estimated using the equation: $\Delta d = c\,\Delta t$, where c is the speed of light and Δt is the difference in anchor arrival times. Considering the case of two anchors, this leads to the following equation:

$$\Delta d = \sqrt{(x_2 - x)^2 - (y_2 - y)^2} - \sqrt{(x_1 - x)^2 - (y_1 - y)^2} \quad (1)$$

where (x_1, y_1) and (x_2, y_2) are the known positions of the anchors.

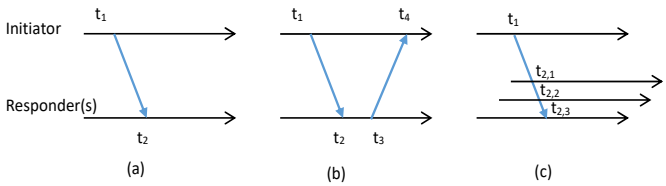

Fig. 1. One-Way Ranging (OWR) (a), Two-Way Ranging (b), and Time Differential of Arrival (TDoA)(c).

In general, the different ranging-based localization techniques all benefit from a mechanism capable of synchronizing the time references of nodes taking part to the localization [19][22]]. Time synchronization between nodes is optional for some of these techniques, such as TWR, but required for others, such as OWR or TDoA. In the latter case, only the anchors need to be synchronized with each other and the the efforts for time dissemination are compensated by the higher scalability, because TWR requires fewer messages.

Different techniques can be used to synchronize the time references of (wireless) nodes involved in the localization. Among those devised for Wireless Sensor Networks (WSN), Timing-Sync [23], and flooding time [24] protocols are well-known. In general, WSN nodes exploit radios not able of achieving high ToA estimation accuracy, but the use of UWB technology [25] or radio signal processing techniques [26] allows for performance optimization, at the cost of increasing the overall complexity. However, in TDoA systems, only anchors, which are generally connected by a wired infrastructure and main supply powered, need to be time synchronized. Accordingly, synchronizing the anchors via the wired infrastructure can require lower effort and provide better performance. In this case, the wireless channel is used solely for localization and connectivity with tags, as better explained in the next section.

III. Wired synhcronization of UWB devices

As mentioned above, the ranging accuracy provided by TDoA solution is directly proportional to time synchronization accuracy. To achieve a target ranging accuracy of 0.1 m, the anchors must be time synchronized to within 300 ps [10] [27]. In that case, the location system should define a Clock Distribution System (CDS), as illustrated in Fig. 2, capable of synchronizing the time reference of each anchor. It should be noted that localization algorithm does not require tag time synchronization in the case of TDoA. There are several techniques in the literature that can be used for this scope. The solutions can be divided into two categories considering the typologies of transmission media: wireless and wired. In the former, the wireless channel used for location is also used for time synchronization. While this solution provides good accuracy in general, the use of the wireless channel for synchronization reduces the available bandwidth for localization. On the contrary, wired synchronization resolves these issues by distributing the clock

Authorized licensed use limited to: ULAKBIM UASL - Galatasaray Universitesi. Downloaded on November 06,2022 at 15:16:55 UTC from IEEE Xplore. Restrictions apply.

over a dedicated wired channel. While this solution may appear challenging, the anchors, in comparison to the tags, are generally already connected to the main grid, so the connection of a dedicated cable for synchronization is feasible.

According to the literature, the distribution of a time reference over a wired connection can be achieved via a communication network, as in the case of IEEE 1588 protocol. However, the TDoA requirement of a synchronization accuracy in the order hundreds of picoseconds, for a 0.1 m ranging accuracy, cannot be achieved by the IEEE 1588. This performance can be obtained by sending a hardware clock signal to each anchor.

A single clock source is typically distributed to all anchors via a star topology [10]. However, due to cable length constraints, this topology architecture is not always feasible, and a chain topology is often preferable. In that case, each anchor in the chain regenerates the clock and re-distributes it to the next anchor in the chain. This article addresses the issue of characterizing the impact of chain topology on localization accuracy. In the considered scenario, each anchor is equipped with a local Phase-Locked Loop (PLL) circuit capable of generating a clock signal suitable for the anchor as well as regenerating the clock for subsequent devices.

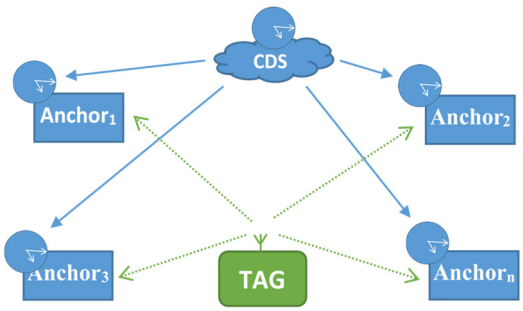

Fig. 2. The Clock Distribution System (CDS) for the TDoA.

A. A real-world example

Without generality loss, a network of anchors built with Qorvo EVB1000 devices, which offer state of the art performance in terms of ranging accuracy, is considered. The UWB devices (EVB1000) can be synchronized by distributing an external clock signal at 38.4 MHz to each anchor and an external trigger line (sync line) to reset the internal counter used to timestamp the UWB packet. The PLL device used to distribute the clock reference signal is the AD9545 from Analog Device. The Analog Device AD9545 is an integrated multipurpose system developed to achieve precision delivery of frequency, phase and time of the day over service provider packet networks compliant with the International Telecommunications Union standards (ITU-T). The main role of the AD9545 is frequency translation and frequency holdover between the reference and generated signals providing synchronization, phase alignment and jitter cleaning. The main configurable functional blocks included in the AD9545 are shown in Fig. 3, where the presence of fully configurable digital phase-locked loop (DPLL) is highlighted.

A dedicated reference input block (REF MONITOR) performs frequency monitoring of the input signals, detecting quality degradation, signals fault and frequency presence for signals from 1Hz up to 750MHz and automatically switching to one of the other valid available references with user-programmable priority.

The DPLL unit includes a programmable digital loop filter with extremely low loop bandwidth capability and a numerical controlled oscillator for precise frequency translation by a 48-bit value factor. The phase alignment is established using an internal zero delay architecture providing phase alignment also between signals with different non harmonic frequencies. Output signals are generated through a specific distribution and synchronization block that integrates up to 5 output Q-driver units. Each unit permits the generation of an output signal with selectable current level (7.5mA, 12mA or 15mA), an independent frequency up to 500MHz and a configurable initial phase offset in both single-ended or differential mode.

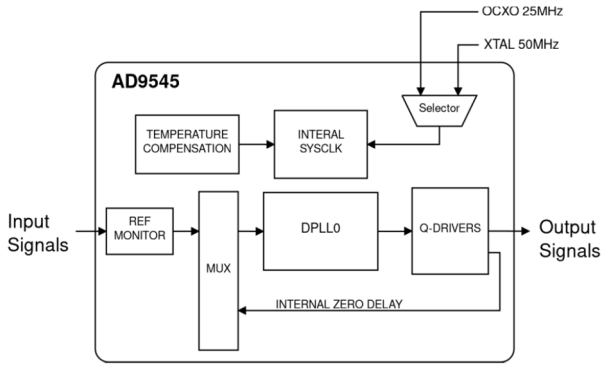

Fig. 3. The experimental set-up used for the characterization of the impact the topologyes of clock distribution has on wired clock synchronication.

IV. Experimental Characterization

A. Experimental set-up

As mentioned in the previous section, the length of the cables required by a wired synchronization of UWB anchors can be reduced by optimizing the topology of the network used for the clock distribution. However, as already discussed in the previous section, the use of alternative distribution topology has a price: the quality of the distributed signal. The topology with the optimal behavior in term of clock distribution is the star, supposing the length of the cable connecting each of the anchors is the same. In this work, the reference star topology (Fig. 4.a) is compared against the chain (Fig. 4.b) one. The devised experimental set-up allows to estimate the impact the different arrangements have on the quality of the distributed clock.

A lab-grade counter, the Keysight 53230A (Option 010), equipped with an Oven Controlled Crystal Oscillator (OCXO), is used for the CDS characterization (Counter in Fig. 4). Thus, the reference clock of the counter has to be furnished to the devices under test. Signal level adaption is performed by means of a lab-grade signal generator Keysight 33500B (SigGen in Fig. 4), which actually provides the hardware reference clock (10 MHz, ref_1 in Fig. 4) to be distributed through the two topology.

The characterization of the system has been performed by connecting the signals to the ingresses (S1 and S2 in Fig. 4) of frequency counter. In particular, the counter has been used to estimate the frequency, f(t), of the clock signals of interest and the phase error, φ(t), defined as the time error between the fronts of two clock signals connected, respectively at the ingress S1 and S2 of the counter. The first parameter represents the capability of the PLL to generate the signal at

Authorized licensed use limited to: ULAKBIM UASL - Galatasaray Universitesi. Downloaded on November 06,2022 at 15:16:55 UTC from IEEE Xplore. Restrictions apply.

the desired frequency, while the second parameter estimate the capability of AD9545 PLL to compensate the phase error of the generated signal.

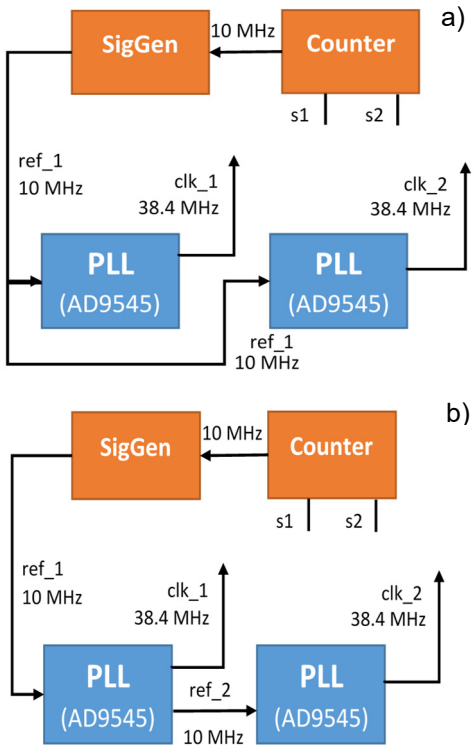

Fig. 4. The block diagram of the experimental set-up used to characterize the chain of the clock distribution. Two different connections of PLLs have been evaluated: the star (a) and the chain (b).

B. Results

In the star topology (Fig. 4a), the ref_1 clock is distributed to two AD9545 EVB boards from Analog Device. Each of the AD9545 PLL has been configured to generate a clock at 38.4 MHz clock: respectively, clk_1 and clk2 in Fig. 4a. The output frequency of the PLLs has been selected according the requirements of the Qorvo EVB1000 anchors, which require precisely a 38.4 MHz clock signal. Each of the component of the system is connected by means of cable of the same length, (i.e. 0.5 m), to reduce the phase error in the clock signal due to the propagation on the cables. The normalized frequency distribution of the frequency of clk_1 and clk_2, in star topology, is shown respectively in Fig. 9.a and Fig. 9.b. Each of the distribution has been obtained using 500 samples collected on short observation interval (i.e. 20 minutes). The maximum variation of clock frequency during the observation interval is respectively 2.84 10^{-3} Hz and 1.29 10^{-3}Hz.

In the chain topology, the ref_1 clock feeds only the first AD9545 EVB PLL board. The PLL has been configured to generate the clk_1 at the frequency of 38.4 MHz. In addition, the AD9545 PLL is configured to generate a reference signal (ref_2 in Fig. 4) using the second PLL, integrated in the same physical devices. Then, the ref_2 signal feeds the second AD9545 EVB PLL board, which is used to generate clk_2. With respect to the star topology, the chain topology has the main benefits to reduce the length of the cables. Inevitably, the second PLL in the chain is affected by the contribution introduced by the first board and by the phase error introduced by the cable connecting the two AD9545 EVB PLL boards. Also in this case, each of the component of the system is connected by means of cable of the same length, (i.e. 0.5 m). The target of the characterization is to estimate and to quantify this contribution to assess the validity of this topology for the wired synchronization of UWB anchors. The normalized frequency distribution of the frequency of clk_1 and clk_2, in chain topology, is shown respectively in Fig. 9.c and Fig. 9.d. Each of the distribution has been obtained using 500 samples collected on short observation interval (i.e. 20 minutes). The maximum variation of clock frequency during the observation interval is respectively 1.07 10^{-3} Hz and 1.3 10^{-3} Hz. The statistical parameters of the characterization are summarized in TABLE I.

The frequency distribution of phase error between clk_1 and clk_2 obtained in the star topology is shown in Fig. 5, while the frequency distribution of phase error of clocks generated by the chain topology is shown in Fig. 6. As shown in TABLE I, worst phase error for the chain topology is on the order of 117 ps, the 9.3 % greater than the worst case for star topology (107 ps), but still compatible with the synchronization requirements imposed by the localization accuracy identified in the introduction (i.e. 0.1 m). Such performance can be explained by the frequency distribution of the ref_2 frequency and by the phase error between the ref_1 and ref_2 signal, shown respectively in Fig. 7 and Fig. 8.

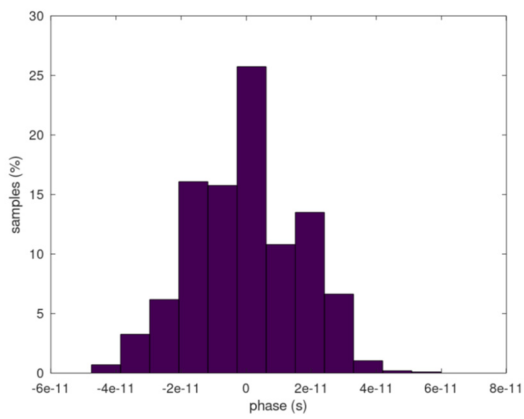

Fig. 5. The normalized frequency distribution of the phase error of the clk_1 and clk_2 in star configuration; 500 samples (20 minutes); bin numbers: 12; bin resolution: 9 ps.

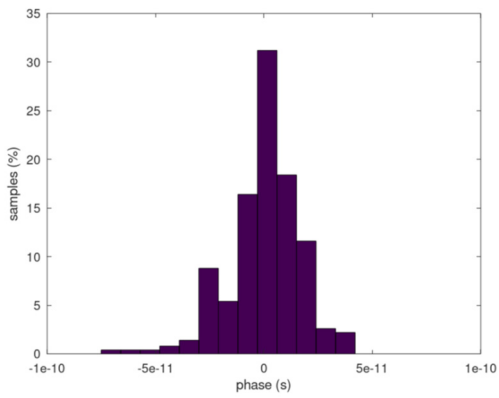

Fig. 6. The normalized frequency distribution of the phase error of the clk_1 and clk_2 in chain configuration; 500 samples (20 minutes); bin numbers: 12; bin resolution: 10 ps.

Authorized licensed use limited to: ULAKBIM UASL - Galatasaray Universitesi. Downloaded on November 06,2022 at 15:16:55 UTC from IEEE Xplore. Restrictions apply.

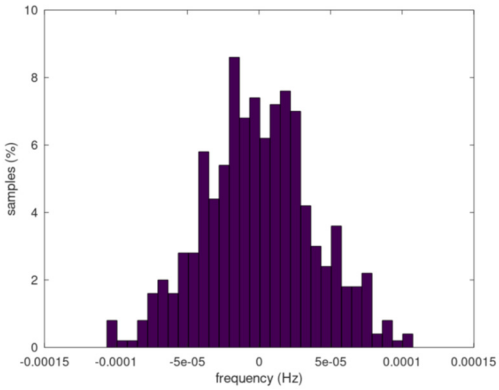

Fig. 7. The normalized frequency distribution of the clock frequency ref_2; mean frequency 10 MHz; 500 samples (20 minutes); bin number: 30; bin resolution: 7 10^{-6} Hz.

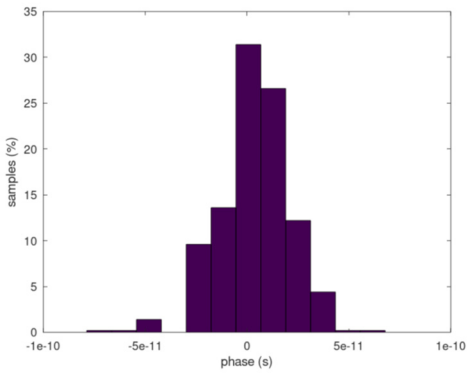

Fig. 8. The normalized frequency distribution of the phase error of the ref_1 and ref_2 ; 500 samples (20 minutes); bin numbers: 12; bin resolution: 12 ps.

TABLE I. THE STATISTICAL PARAMETERS OBTAINED DURING THE CHARACTERIZATION

Topology	Meas.	Statistical Parameters		
		Mean	***Std. Dev***	***Jitter***
Star	f_{c1}	38.39 MHz	1.7510^{-4} Hz	2.84 10^{-3} Hz
	f_{c2}	38.39 MHz	1.5810^{-4} Hz	1.29 10^{-3}Hz
	ϕ_{c1c2}	7.13 10^{-9} s	1.62e^{-11} s	1.07 10^{-10} s
Chain	f_{r2}	10 MHz	3.04 10^{-5} Hz	1.96 10^{-4} Hz
	f_{c1}	38.39 MHz	1.44 10^{-4} Hz	1.07 10^{-3} Hz
	f_{c2}	38.39 MHz	1.58 10-^{4} Hz	1.3 10^{-3} Hz
	ϕ_{c1c2}	7.5 10^{-9} s	1.68 10^{-11} s	1.17 10^{-10} s
	Φ_{r1r2}	8.3 10^{-9} s	1.75 10^{-11}s	1.46 0^{-10} s

V. CONCLUSIONS

The Internet of Things paradigm is increasing the The Internet of Things paradigm is increasing the availability of data. The huge amount of information is enabling the design of innovative services. Some of these services demand the spatial reference of information obtained from IoT devices. Systems based on UWB technologies are among the most promising localization solutions. Because of the characteristics of these systems, it is possible to achieve localization accuracies of tens of centimeters. The different UWB-based localization algorithms, particularly the TDoA, necessitate precise time synchronization. The purpose of this article was to investigate wired synchronization techniques for localization applications. In particular, two clock distribution topologies were compared: the star and the chain. The star topology represents the ideal solution, in which all devices to be synchronized are connected to the same clock source via cables of equal length. The chain topology, on the other hand, permits cabling optimization. The experimental characterization revealed that the maximum phase error between clocks generated by the chain topology is 9.3 % per hop. This result is worse than the phase error of clocks in case of star topology, but is still compatible with the requirements of localization applications. Thus, the number of anchors that can be connected in chain is limited since the TDoA solutions have stringent synchronization requirements for the anchors. In practice, tree clock distribution topologies with a limited number of nodes per branch are preferable to purely chain topologies. In addition, the achieved synchronization performance depends on several factors, including: the quality of the cable used to transfer the synchronization signal, the presence of electromagnetic disturbances that can be coupled with the signal, the calibration of cable length and of electronic front-end. Deploying such wired infrastructure in a real scenario can be possible (as demonstrated by similar systems used in industry and power utility applications), but it requires extra care to prevent rapid performance degradation.

Last but not least, it is expected that the accuracy provided by the synchronization mechanism has different impact on different localization solutions, such as TDoA. However, the experimental analysis of the impact of synchronization on localization error is beyond the scope of the current research paper and it is planned for future works.

REFERENCES

[1] E. Toscano and L. Lo Bello, "A topology management protocol with bounded delay for Wireless Sensor Networks," *2008 IEEE International Conference on Emerging Technologies and Factory Automation*, 2008, pp. 942-951, doi: 10.1109/ETFA.2008.4638508.

[2] Guo, K., Qiu, Z., Meng, W., Xie, L., Teo, R., "Ultra-wideband based cooperative relative localization algorithm and experiments for multiple unmanned aerial vehicles in GPS denied environments" (2017) International Journal of Micro Air Vehicles, 9 (3), pp. 169-186.

[3] G. Balamurugan, et al. "Survey on UAV navigation in GPS denied environments", in Proc. of SCOPES 2016, pp. 198-204.

[4] Magnago, V., Corbalan, P., Picco, G.P., Palopoli, L., Fontanelli, D.Robot Localization via Odometry-assisted Ultra-wideband Ranging with Stochastic Guarantees, (2019) IEEE International Conference on Intelligent Robots and Systems, art. no. 8968019, pp. 1607-1613.

[5] Colombo, A., Fontanelli, D., MacIi, D., Palopoli, L. , "Flexible indoor localization and tracking based on a wearable platform and sensor data fusion", (2014) IEEE Transactions on Instrumentation and Measurement, 63 (4), pp. 864-876.

[6] Bellagente, P., Bonafini, F., Crema, C., Depari, A., Ferrari, P., Flammini, A., Lenzi, G., Pasetti, M., Rinaldi, S., Sisinni, E., Enhancing access to industrial iot measurements by means of location based services, (2018) IEEE Instrumentation and Measurement Magazine, 21 (6), art. no. 8573588, pp. 15-21.

[7] De Angelis, G., Moschitta, A., Carbone, P., "Positioning techniques in indoor environments based on stochastic modeling of UWB round-trip-time measurements", (2016) IEEE Transactions on Intelligent Transportation Systems, 17 (8), pp. 2272-2281.

[8] Bonafini, F., Ferrari, P., Flammini, A., Rinaldi, S., Sisinni, E., Exploiting Time Synchronization as Side Effect in UWB Real-Time Localization Devices, (2018) IEEE International Symposium on Precision Clock Synchronization for Measurement, Control, and Communication, ISPCS, 2018-September.

[9] Rinaldi, S., Ferrari, P., Sisinni, E., Depari, A., Flammini, A. An evaluation of low-cost self-localization service exploiting angle of arrival for industrial cyber-physical systems, (2021) IEEE AFRICON Conference, 2021-September.

Authorized licensed use limited to: ULAKBIM UASL - Galatasaray Universitesi. Downloaded on November 06,2022 at 15:16:55 UTC from IEEE Xplore. Restrictions apply.

[10] “Wired synchronization of anchor nodes in a tdoa real time location system”, APS007 application note, Decawave, [on-line]. Available: https://www.decawave.com/application-notes/ [accessed 08 December, 2021].

[11] Rizzi, M., Rinaldi, S., Ferrari, P., Flammini, A., Prof., Fontanelli, D., Macii, D., Enhancing Accuracy and Robustness of Frequency Transfer Using Synchronous Ethernet and Multiple Network Paths, (2016) IEEE Transactions on Instrumentation and Measurement, 65 (8), art. no. 7470260, pp. 1926-1936.

[12] IEC 24730-1:2014 Information technology — Real-time locating systems (RTLS), IEC, 2014.

[13] Mazraani, R., Saez, M., Govoni, L., Knobloch, D., “Experimental results of a combined TDOA/TOF technique for UWB based localization systems”, in Proc. of IEEE ICC Workshops 2017, pp. 1043-1048.

[14] J. Tiemann, et al. “Multi-user interference and wireless clock synchronization in TDOA-based UWB localization”, in IPIN 2016.

[15] A. Alarifi, et al. “Ultra wideband indoor positioning technologies: Analysis and recent advances” (2016) Sensors (Switzerland), 16 (5), art. no. 707.

[16] IEC 24730-62:2013 Information technology — Real time locating systems (RTLS) — Part 62: High rate pulse repetition frequency Ultra Wide Band (UWB) air interface, IEC, 2013

[17] IEEE Standard for Low-Rate Wireless Networks," in IEEE Std 802.15.4-2015, pp.1-709, April 22 2016.

[18] I. Guvenc, et al. "Ultra-wideband range estimation: Theoretical limits and practical algorithms,", in Proc. of IEEE ICUW, 2008, pp. 93-96.

[19] C. McElroy, D. Neirynck and M. McLaughlin, "Comparison of wireless clock synchronization algorithms for indoor location systems", in Proc. of IEEE ICC, 2014, pp. 157-162.

[20] Djaja-Josko, V., Kolakowski, J., “A new method for wireless synchronization and TDOA error reduction in UWB positioning system”, in Proc. of MIKON 2016.

[21] R. Hach, et al. "Wireless synchronization in time difference of arrival based real time locating systems," in proc WPNC, 2012, pp. 193-195.

[22] J. Zheng and Y. C. Wu, "Joint Time Synchronization and Localization of an Unknown Node in Wireless Sensor Networks," in IEEE Tran. on Signal Processing, vol. 58, no. 3, pp. 1309-1320, March 2010.

[23] S. Ganeriwal, R. Kumar, and M. B. Srivastava, “Timing-sync protocol for sensor networks,” in Proc. 1st Int. Conf. Embedded Netw. Sensor Syst., 2003, pp. 138–149.

[24] M. Maroti, B. Kusy, G. Simon, and A. Ledeczi, “The flooding time synchronization protocol,” in Proc. 2nd Int. Conf. Embedded Netw. Sensor Syst., 2004, pp. 39–49.

[25] P. Carbone, A. Cazzorla, P. Ferrari, A. Flammini, A. Moschitta, S. Rinaldi, T. Sauter, E. Sisinni, "Low Complexity UWB Radios for Precise Wireless Sensor Network Synchronization", IEEE Trans. Instrumentation and Measurement, September, 2013, Vol. 62, N. 9, pp. 2538-2548.

[26] De Dominicis, C.M., Pivato, P., Ferrari, P., MacIi, D., Sisinni, E., Flammini, A., Timestamping of IEEE 802.15.4a CSS signals for wireless ranging and time synchronization (2013) IEEE Transactions on Instrumentation and Measurement, 62 (8), art. no. 6524050, pp. 2286-2296.

[27] Smaoui, N., Heydariaan, M., Gnawali, O.,Anchor-oriented time and phase-based concurrent self-localization using UWB radios,(2021) Proceedings - Conference on Local Computer Networks, LCN, 2021-October, pp. 265-272.

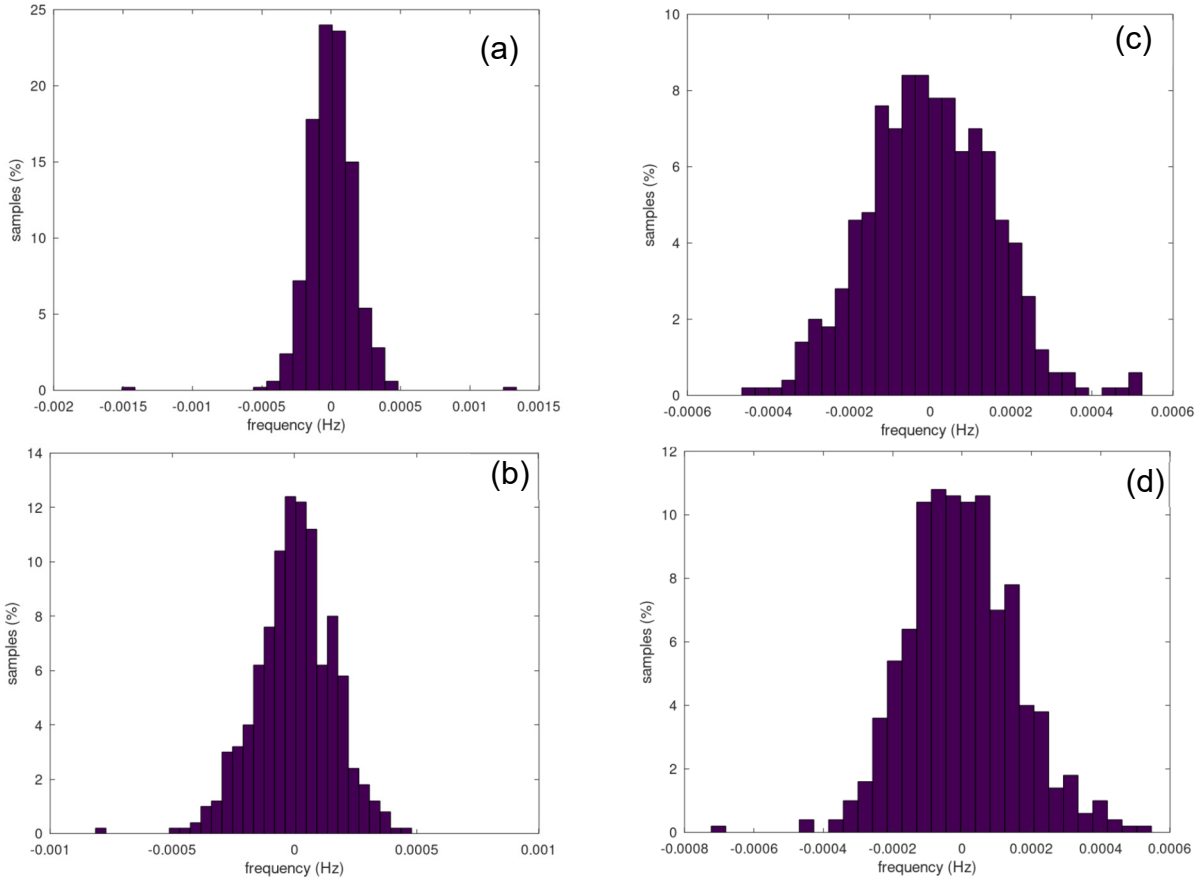

Fig. 9. The normalized frequency distribution of clock frequency in star configuration: (a) clk_1, (b) clk_2 and in chain configuration: (c) clk_1, (d) clk_2; mean frequency 38.4 MHz; 500 samples (20 minutes); bin numbers: 30; bin resolution: 4 10^{-5} Hz.

Authorized licensed use limited to: ULAKBIM UASL - Galatasaray Universitesi. Downloaded on November 06,2022 at 15:16:55 UTC from IEEE Xplore. Restrictions apply.